DWG. NO. 900-191-777

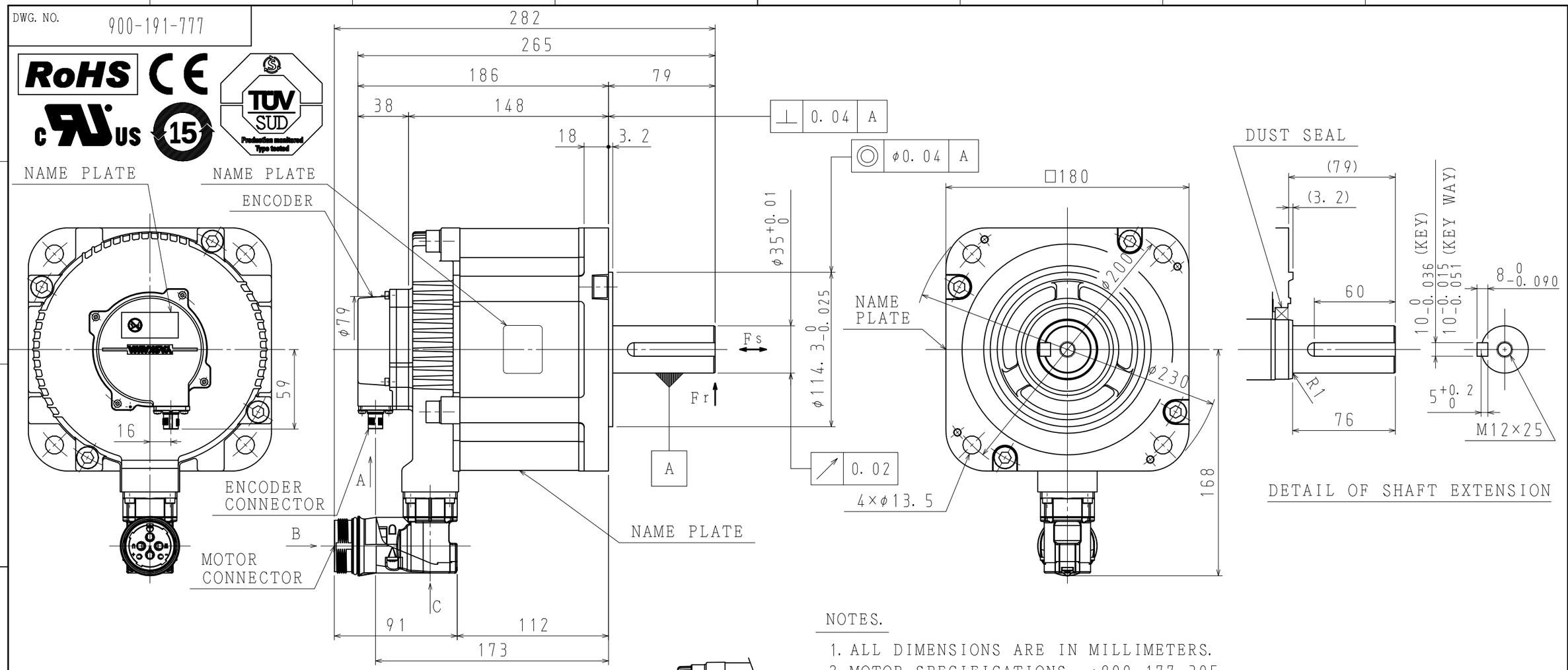

ENCODER TERMINAL CONNECTION

1	PG5V
2	PG0V
3	FRAME GROUND
4	-
5	-
6	DATA (+)
7	DATA (-)
8	-
CON. CASE	FRAME GROUND

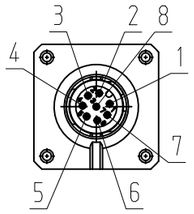

VIEW A

RECEPTACLE SIZE:M12

HOUSING:SACC-MSQ-M12MS-25-3,2 SCO

MAKER:PHOENIX CONTACT

MOTOR TERMINAL CONNECTION

U	PHASE U
V	PHASE V
W	PHASE W
+	-
-	-
FG	FRAME GROUND
CON. CASE	FRAME GROUND

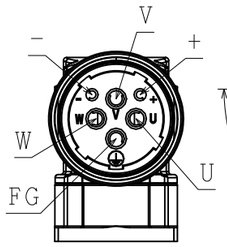

VIEW B

RECEPTACLE SIZE:M40

HOUSING:SM-5EPWN8AAD00S

MAKER:PHOENIX CONTACT

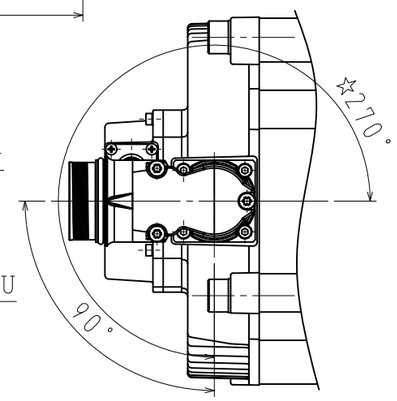

VIEW C

NOTES.

1. ALL DIMENSIONS ARE IN MILLIMETERS.
2. MOTOR SPECIFICATIONS :900-177-305
3. ENCODER SPECIFICATIONS:900-193-533(24BIT INCREMENTAL)
4. VIBRATION : 15μm OR BELOW AT RATED SPEED.
5. PLUGS AND CABLE CLAMPS ARE OPTIONAL.
6. READ AND UNDERSTAND DOCUMENT PACKED WITH MOTOR (SAFETY PRECAUTIONS), AND BE CAREFUL USING MOTOR.
7. DEGREES OF PROTECTION:IP67 EXCEPT FOR SHAFT OPENING. MUST USE SPECIFIED CONNECTORS FOR MOTOR.
8. DO NOT TOUCH EACH OF CONNECTOR PINS DIRECTLY. IT CAUSE FAILURE.
9. IN CASE OF MOUNTING THIS MOTOR HORIZONTAL, TO PLACE THE CONNECTOR DOWN IS RECOMMENDABLE.
10. USE HEXAGON SOCKET HEAD CAP SCREWS FOR MOUNTING MOTOR.
11. MOTOR CONNECTOR COULD BE TURNED IN THE RANGE OF ☆ WITHIN 10 TIMES.

TYPE	RATED OUTPUT kW	RATED TORQUE N·m	TIME RATING	RATED SPEED min^{-1}	VOLTAGE Vrms	RATED CURRENT Arms	THERMAL CLASS	WEIGHT kg	ALLOWABLE RADIAL LOAD Fr N	ALLOWABLE THRUST LOAD Fs N
SGM7G-44DFR6F	4.4	28.4	CONT.	1500	400 (3PHASE)	② ~~20.8~~ 19.3	F	18.0	1470 (AT SHAFT END)	490

2	1	Revised	Feb. 04,'17	K. INOUE/T. HIROSE
1	-	Revised	Nov. 24,'16	H. SEKI/T. HIROSE

SCALE 1 : 3

YASKAWA

DRWN.	Y. YAMAKAWA	TITLE	AC SERVOMOTOR Σ-7 SERIES
CHKD.	T. HIROSE		SGM7G MODEL 4.4kW
APRV.	K. AOKI		

DRWN. DATE NOV. 8 '16

DWG. NO. 900-191-777

REV. ②

SIZE A3